ADJUSTABLE POLE MOUNT - FL04/05/08

DESCRIPTION:

Our adjustable pole mount can be attached to poles, posts, or directly to a wall. The angle can be adjusted by 180°, with 90° of adjustment upward and 90° downward. It is designed to fit our FL08 series of area flood lights, available in 45W or 100W configurations, along with their mountings. Constructed from durable materials, this mount ensures stability and is weather-resistant for outdoor use. It is easy to install and compatible with various round and square pole sizes, making it a practical solution for versatile equipment mounting.

FEATURES:

- SKU: NUR-MNT08-ADJ-ARM-BNZ
- Modify height, angle.
- Firmly attaches to poles/walls.
- Simple installation process.

APPLICATIONS:

- Flood lights
- Outdoor lighting
- Pole lights
- Area lights
- Shoebox lights
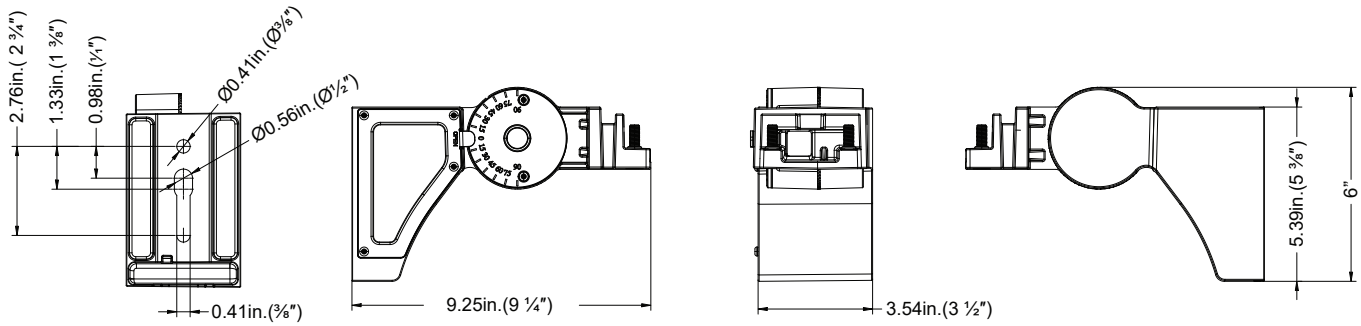
DIMENSIONS: